STERLING shapes by STERLING surfaces

SS-REDONDO

BATHROOM LAVATORY BOWL
SS-REDONDO

What you get:

- Large, spherical under-mount bowl, center drain
- Solid Surface material
- With or without overflow options
- 14.25” (362mm) x 14.25” (362mm) x 5” (127mm)
- 180 grit final finish after mount by fabricator
- 10 year material / 1 year fabrication warranty

Available in Most Colors

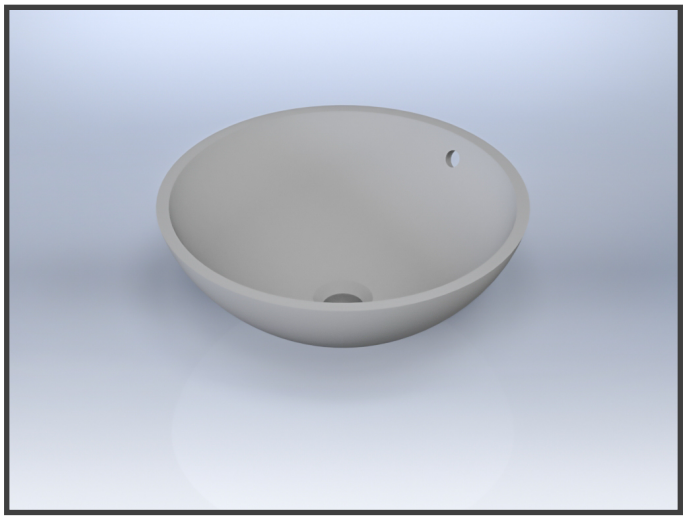

Model #	Description
SS-REDONDO-(color)	Under-mount Solid Surface lavatory - with overflow
SS-REDONDO-NOF-(color)	Under-mount Solid Surface lavatory - no overflow

Product Specification:

Sterling Shapes lavatory bowl 14.25” in length and 14.25” in width. Lavatory bowl to be made of thermoformed Solid Surface material and mounted below counter in a seamed under-mount application. Lavatory bowl will have an overflow unless otherwise specified. Solid Surface lavatory bowl shall be Sterling Shapes SS-REDONDO. Lavatory bowl edge to be chamfered for optimal deck to bowl color match.

SS-REDONDO

Technical Information	
Fixture Specifications	Measurements approximate
Basin Area	14.25” (362mm) x 14.25” (362mm)
Water Depth	5” (127mm)
Drain Hole	1.75” (44.4mm)

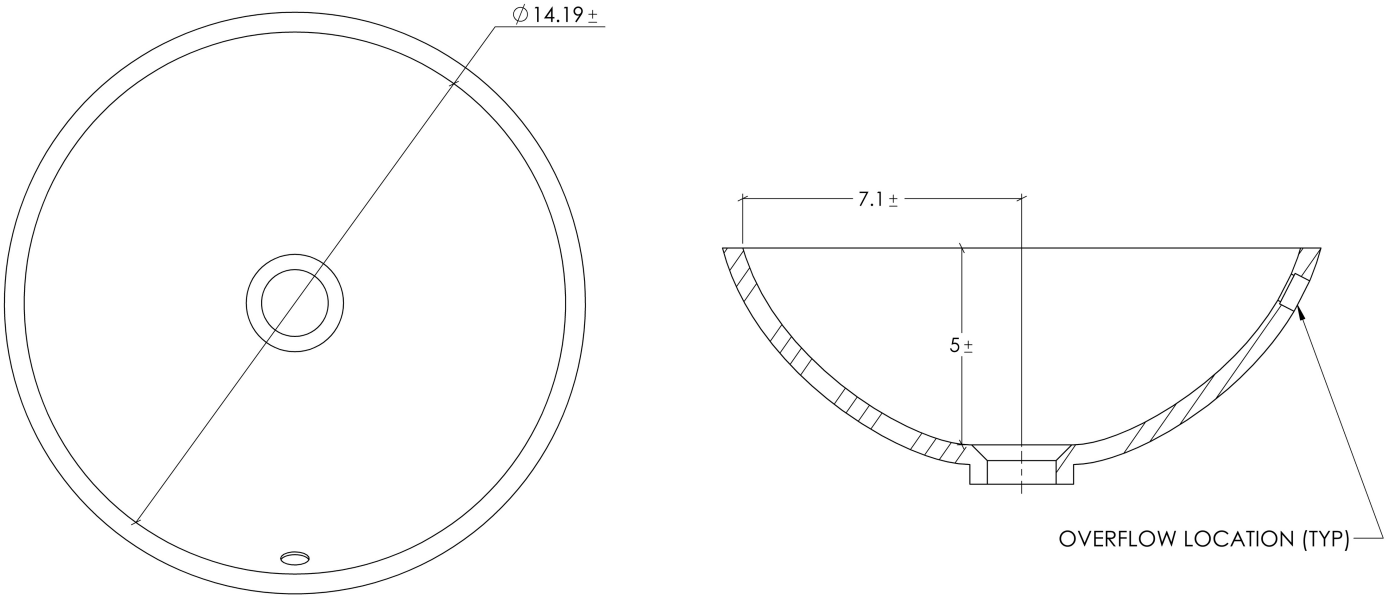

Fabrication notes:

As is typical with formed shapes to be mounted into the same color deck, a 45 degree chamfered edge between the deck and sink ending on the seam line can minimize color variations between the two parts.